LT050A-02B 240 x 128 dots TFT LCD, 7 color combinations, 8-bit parallel, 3.3V to 5.5V

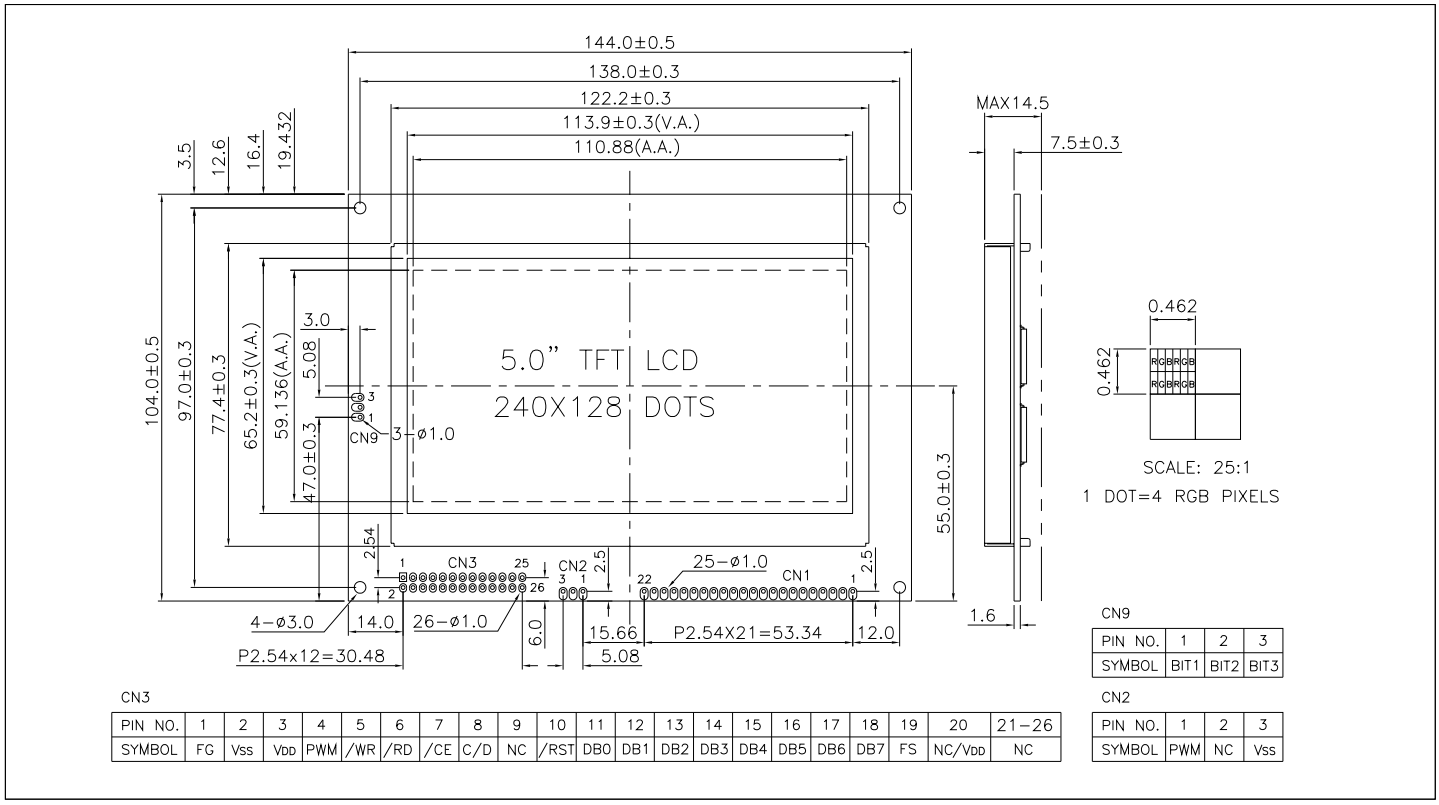

CN3

PIN NO.	1	2	3	4	5	6	7	8	9	10	11	12	13	14	15	16	17	18	19	20	21-26
SYMBOL	FG	Vss	VDD	PWM	/WR	/RD	/CE	C/D	NC	/RST	DB0	DB1	DB2	DB3	DB4	DB5	DB6	DB7	FS	NC/VDD	NC

CN9

PIN NO.	1	2	3
SYMBOL	BIT1	BIT2	BIT3

CN2

PIN NO.	1	2	3
SYMBOL	PWM	NC	Vss

ABSOLUTE MAXIMUM RATINGS

Item	Symbol	Min.	Max.	Unit
Supply Voltage	V_{DD}- V_{SS}	-0.3	5.5	V
Input Voltage	V_I	-0.3	V_{DD}+ 0.3	V
Operating Temp.	T_{opr}	-20	70	°C
Storage Temp.	T_{stg}	-30	80	°C

MECHANICAL DATA

Item	Nominal Dimensions	Unit
Module Size (W x H x T)	144.0 x 104.0 x 14.5	mm
Viewing Area (W x H)	113.9 x 65.2	mm
Dot Pitch (W x H)	0.462 x 0.462	mm
Weight	Approx. 140	g

ELECTRICAL CHARACTERISTICS (V_{DD}=3.3V to 5.5V)

Item	Symbol	Test Condition	Min.	Typ.	Max.	Unit
Input High Voltage	V_{IH}	--	0.8V_{DD}	--	V_{DD}	V
Input Low Voltage	V_{IL}	--	0	--	0.2V_{DD}	V
Supply Current (LED is turned on)	I_{DD}	V_{DD} = 5.0V	--	210	240	mA
		V_{DD} = 3.3V	--	290	330	mA
Supply Current (LED is turned off)	I_{DD}	V_{DD} = 5.0V	--	80	95	mA
		V_{DD} = 3.3V	--	75	90	mA

PIN CONNECTIONS (CN1)

Pin	Symbol	Level	Function
1	FG	--	Frame ground
2	V_{SS}	0V	GND
3	V_{DD}	3.3 to 5.5V	Power supply for logic and LED
4	NC/PWM	--	J3 open: No connection (default) J3 close: PWM signal for LED
5	/WR	L	Write signal. Active "L".
6	/RD	L	Read signal. Active "L".
7	/CE	L	Chip enable singal. Active "L".
8	C/D	H/L	L : Data H : Instruction code
9	NC	--	No connection
10	/RST	L	Reset signal. Active "L".
11	DB0	H/L	Data bus
12	DB1	H/L	
13	DB2	H/L	
14	DB3	H/L	
15	DB4	H/L	
16	DB5	H/L	
17	DB6	H/L	
18	DB7	H/L	
19	FS	H/L	Font selection L: 8x8, H: 6x8
20	NC/V_{DD}	--	J2 open: No connection (default) J2 close: Pin 20 is shorted to V_{DD}
21	PWM	H/L	PWM signal for LED control PWM="H": LED backlight on PWM="L": LED backlight off
22	NC	--	No connection
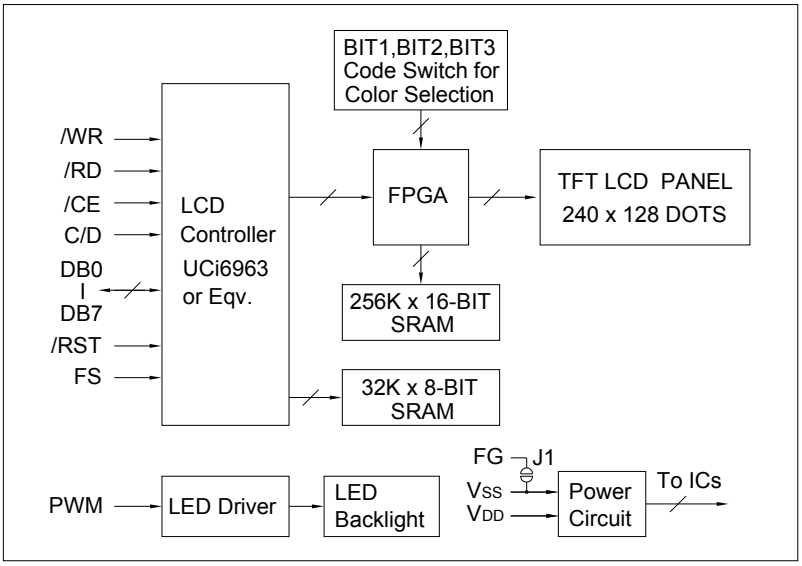
BLOCK DIAGRAM